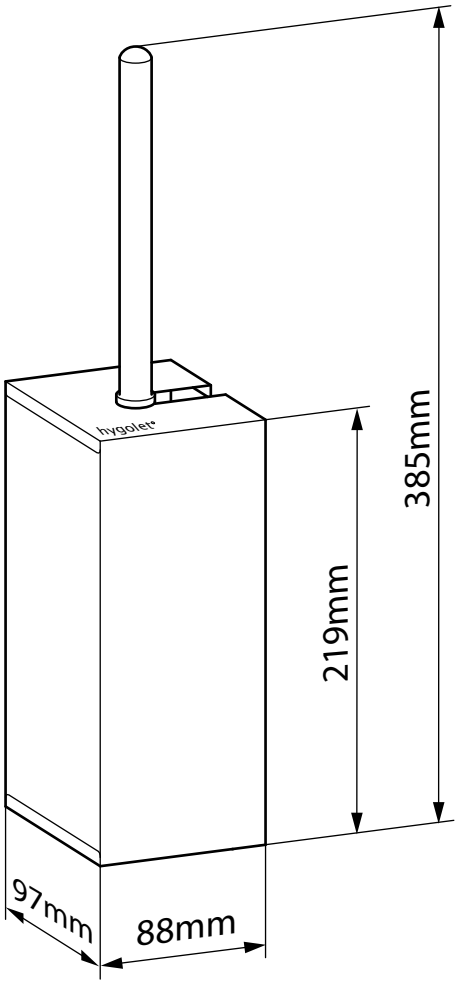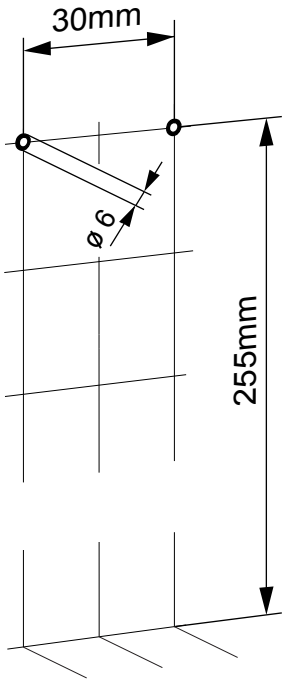CHROMSTAR Art.-No. 50.815